40W Multiple-Stage Output Current LED Power Supply LCM-40DA series

■ Features :

- Output current level selectable by DIP S.W.
- 180~295VAC input only
- Built-in active PFC function
- Protections: Short circuit / Over voltage / Over temperature
- Cooling by free air convection
- Fully isolated plastic case
- Class Ⅱ power unit, no FG
- Built-in DALI interface and push dimming function
- Built-in 12V/50mA auxiliary output
- IP20 design
- Temperature compensation function by external NTC
- No load power consumption <1.2W(Note.7)
- Power supplies synchronization function up to 10 units
- Suitable for indoor LED lighting applications
- 3 years warranty

SPECIFICATION

MODEL		LCM-40DA					
OUTPUT	SELECTABLE CURRENT Note.3	350mA	500mA	600mA	700mA	900mA	1050mA
	DC VOLTAGE RANGE	2 ~ 100V	2 ~ 80V	2 ~ 67V	2 ~ 57V	2 ~ 45V	2 ~ 40V
	RATED POWER	42W					
	RIPPLE CURRENT	±5%					
	RIPPLE & NOISE (max.) Note.2	700mVp-p					
	NO LOAD OUTPUT VOLTAGE (max.)	110V			65V		
	CURRENT ACCURACY	±5.0%					
	SETUP, RISE TIME Note.5	1000ms, 80ms / 230VAC at rated power					
	HOLD UP TIME (Typ.)	16ms/230VAC at rated power					
INPUT	VOLTAGE RANGE Note.4	180 ~ 295VAC 254 ~ 417VDC					
	FREQUENCY RANGE	47 ~ 63Hz					
	POWER FACTOR (Typ.)	PF≧0.975/230VAC, PF≧0.96/277VAC at rated power (Please refer to "Power Factor Characteristic" curve)					
	TOTAL HARMONIC DISTORTION	Total harmonic distortion will be lower than 20% when output loading is 75% or higher					
	EFFICIENCY (Typ.) Note.6	91%					
	AC CURRENT (Typ.)	0.23A/230VAC 0.2A/277VAC					
	INRUSH CURRENT (Typ.)	COLD START 20A(t_{width}=260μs measured at 50% I_{peak}) at 230VAC					
	LEAKAGE CURRENT	<0.5mA / 240VAC					
PROTECTION	SHORT CIRCUIT	Constant current limiting, recovers automatically after fault condition is removed					
	OVER VOLTAGE	110 ~ 130V					
		Protection type : Shutdown o/p voltage, re-power on to recover					
	OVER TEMPERATURE	90℃±10℃ (RTH2)					
		Protection type : Shut down o/p voltage, re-power on to recover					
FUNCTION	AUXILIARY POWER	12V @ 50mA for driving fan; Tolerance ±5%					
	TEMP. COMPENSATION	By external NTC(not provide with the power supply), please see "Temperature compensation operation"					
	DIMMING	Please see "Dimming Operation"					
	SYNCHRONIZATION	Please see "Synchronization Operation"					
ENVIRONMENT	WORKING TEMP.	-30 ~ +60℃ (Refer to "Derating Curve")					
	WORKING HUMIDITY	20 ~ 90% RH non-condensing					
	STORAGE TEMP., HUMIDITY	-40 ~ +80℃, 10 ~ 95% RH					
	TEMP. COEFFICIENT	±0.03%/℃ (0 ~ 50℃)					
	VIBRATION	10 ~ 500Hz, 2G 10min./1cycle, period for 60min. each along X, Y, Z axes					
SAFETY & EMC	SAFETY STANDARDS	UL8750, ENEC EN61347-1, EN61347-2-13,EN62384 independent approved					
	DALI STANDARDS	Comply with IEC62386-101, 102, 207					
	WITHSTAND VOLTAGE	I/P-O/P:3.75KVAC					
	ISOLATION RESISTANCE	I/P-O/P:>100M Ohms / 500VDC / 25℃/ 70% RH					
	EMC EMISSION	Compliance to EN55015, EN61000-3-2 Class C(≧40% rated power) ; EN61000-3-3					
	EMC IMMUNITY	Compliance to EN61000-4-2,3,4,5,6,8,11, EN55024, EN61547 light industry level (surge 2KV), criteria A					
OTHERS	MTBF	193.6K hrs min. MIL-HDBK-217F (25℃)					
	DIMENSION	123.5*81.5*23mm (L*W*H)					
	PACKING	0.24Kg ; 54pcs/15Kg/1.12CUFT					
NOTE	1. All parameters NOT specially mentioned are measured at 230VAC input, rated load and 25℃ of ambient temperature. 2. Ripple & noise are measured at 20MHz of bandwidth by using a 12" twisted pair-wire terminated with a 0.1uf parallel capacitor. 3. Please see "DIP switch table". 4. Derating may be needed under low input voltage. Please check the static characteristics for more details. 5. Length of set up time is measured at first cold start. Turning ON/OFF the power supply may lead to increase of the set up time. 6. Efficiency is measured at 500mA/80V output set by DIP switch. 7. No load power consumption<1.2W is measured at 180~277VAC, with lighting fixture connected and output current dimmed to 0%. 8. The power supply is considered as a component that will be operated in combination with final equipment. Since EMC performance will be affected by the complete installation, the final equipment manufacturers must re-qualify EMC Directive on the complete installation again.						

■ Mechanical Specification

Case No.LCM-60A Unit:mm

※ T case: Max. Case Temperature.

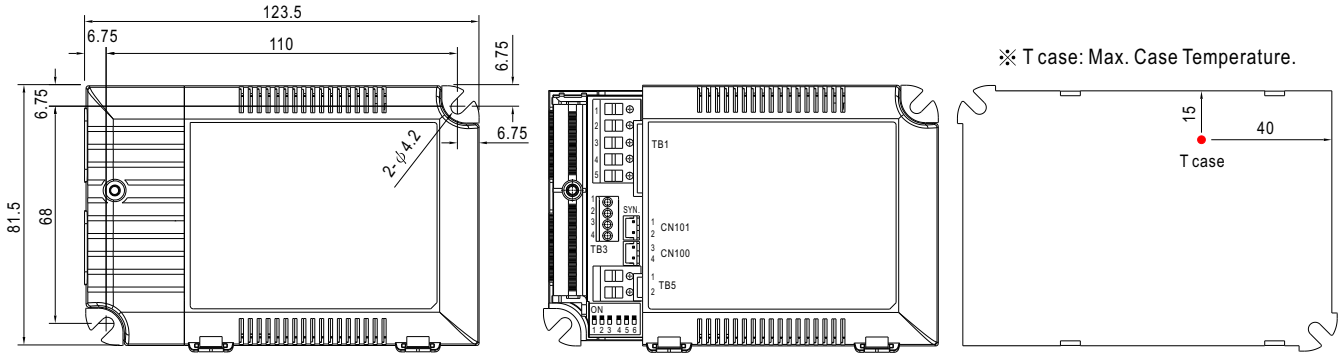

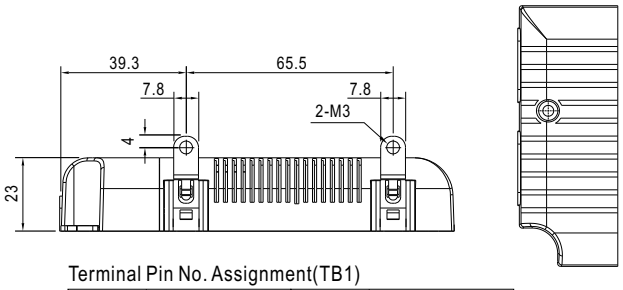

Terminal Pin No. Assignment(TB3)

Pin No.	Assignment	Pin No.	Assignment
1	+FAN	3	+NTC
2	-FAN	4	-NTC

Terminal Pin No. Assignment(TB5)

Pin No.	Assignment
1	+Vo
2	-Vo

Terminal Pin No. Assignment(TB1)

Pin No.	Assignment	Pin No.	Assignment
1	AC/L	4	DA+
2	AC/N	5	DA-
3	PUSH		

SYN. Connector(CN101/CN100):JST B2B-XH or equivalent

Pin No.	Assignment	Mating Housing	Terminal
1,3	+	JST XHP or equivalent	JST SXH-001T-P0.6 or equivalent
2,4	–		

PFC fosc : 60KHz
PWM fosc : 80KHz

■ Block Diagram

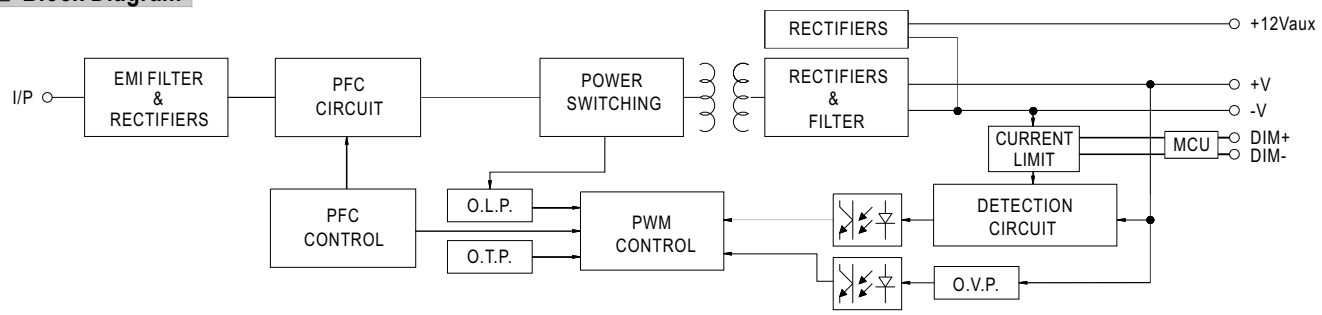

■ Derating Curve

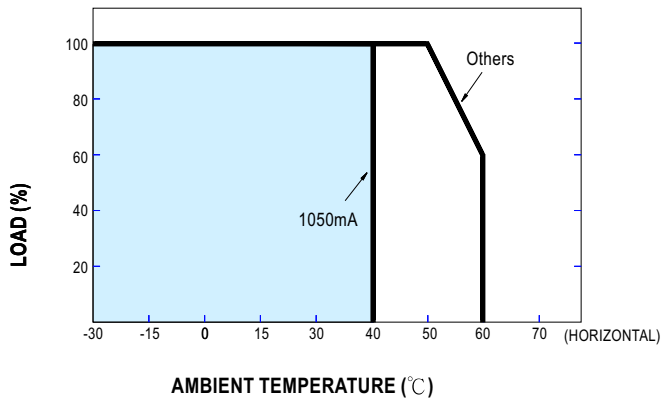

■ Static Characteristics

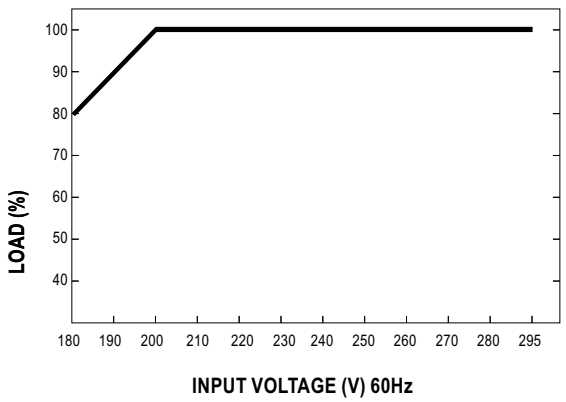

■ DIP Switch Table

LCM-40DA is a multiple-stage output current supply, selection of output current through DIP switch as table below.

Io \ DIP S.W.	1	2	3	4	5	6
350mA	----	----	----	----	----	----
500mA	ON	----	----	----	----	----
600mA	ON	ON	----	----	----	----
700mA(Factory Setting)	ON	ON	ON	----	----	ON
900mA	ON	ON	ON	ON	----	ON
1050mA	ON	ON	ON	ON	ON	ON

■ Power Factor Characteristic

Constant Current Mode

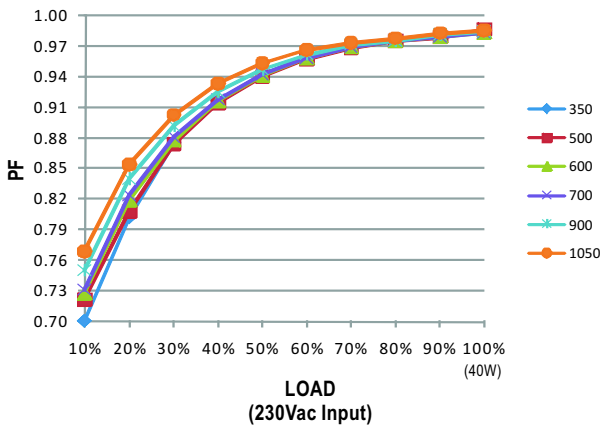

Constant Current Mode

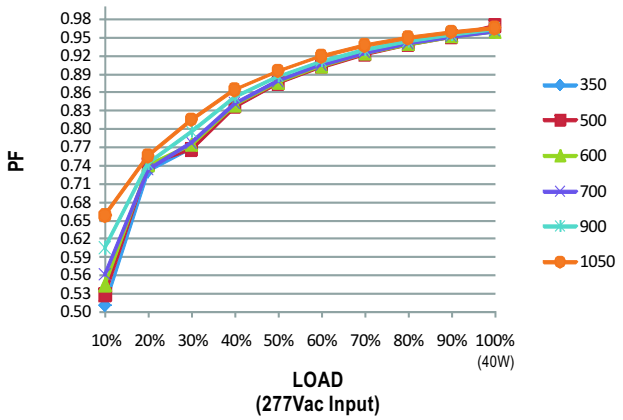

■ EFFICIENCY vs LOAD

LCM-40DA series possess superior working efficiency that up to 91% can be reached in field applications.

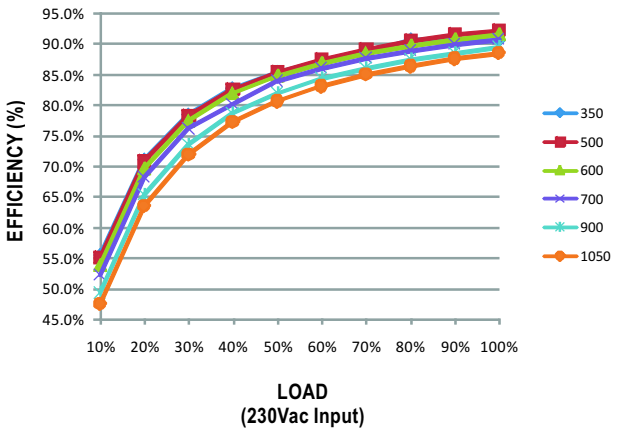

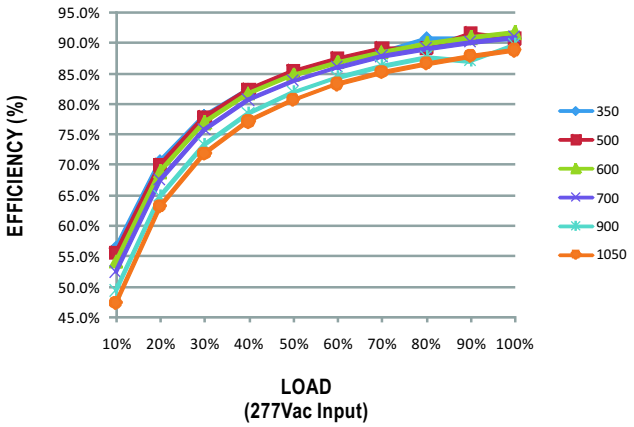

■ DIMMING OPERATION

※ **PUSH dim(primary side)**

Ignore	To avoid reaction on AC spike	<0.05 sec.
Short push	Push to turn ON-OFF	0.1~1 sec.
Long push	Dimming up or down	1.5~10 sec.
Reset push	Setting light to 100%	>11 sec.

- Maximum number of drivers up to 10 pcs.
- Maximum length of the cable, from push button to last driver is 20 meter.
- Factory setting at 100%.
- When the light is lower than 10% it will always dim up, or when the light output is higher than 90% it will always dim down.

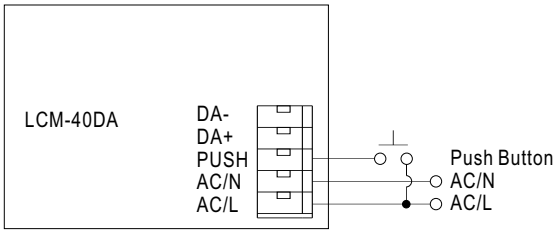

Warning: The pushbutton can only be connected in between the PUSH terminal of LCM-40DA and AC/L (brown or black color). It would cause short circuit if it is connected to AC/N.

※ **DALI interface(primary side)**

- DALI protocol including 16 groups and 64 addresses.
- First step is fixed at 6% of output.

■ SYNCHRONIZATION OPERATION

- 10 drivers(max.) synchronization (1 master + 9 slaves)
- Maximum cable length between each units : 20 meter.

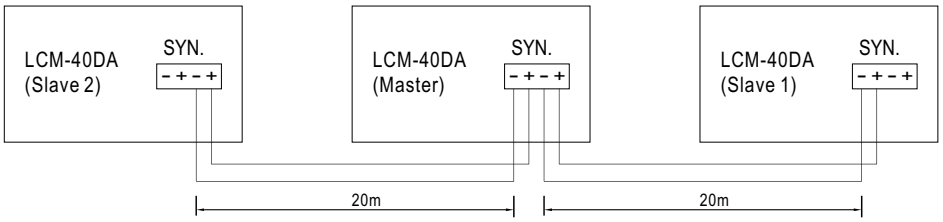

■ TEMPERATURE COMPENSATION OPERATION

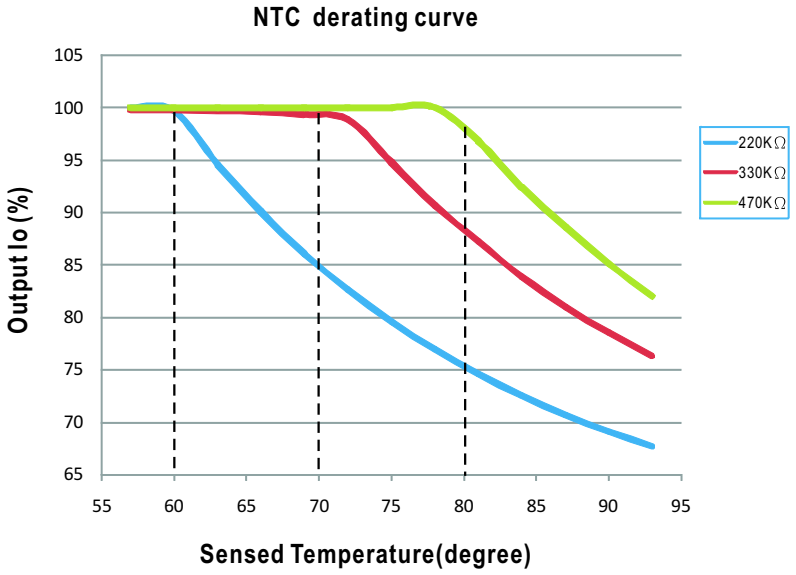

LCM-40DA have the built-in temperature compensation function (T ↑ ,Io ↓). By connecting a temperature sensor (NTC resistor) between the NTC +/- terminal of LCM-40DA and the detecting point on the lighting system or the surrounding environment, output current of LCM-40DA could be correspondingly changed to ensure the long life of LED.

1.LCM-40DA can still be operated well when the NTC resistor is not connected and the value of output current will be the current level that you set through the DIP switch.

2.

NTC resistance	Output Current
220K	< 60℃, 100% of the rated current (corresponds to the setting current level) > 60℃, output current begin to reduce, details please refer to the curve.
330K	< 70℃, 100% of the rated current (corresponds to the setting current level) > 70℃, output current begin to reduce, details please refer to the curve.
470K	< 80℃, 100% of the rated current (corresponds to the setting current level) > 80℃, output current begin to reduce, details please refer to the curve.

Notes: 1. MW does not offer the NTC resistor and all the data above are measured by using THINKING TTC03 series.
2. If other brands of NTC resistor is applied,please check the temperature curve first.
3. Synchronization function of the power supply will be invalid when the "temperature compensation" function is in use.